l'ombre®
EXCLUSIEVE VERLICHTING

BOX-SUR-P-25030-GRIP-X4-DB

JUNCTION BOXES

PRODUCT DETAILS

The junction boxes, designed by l'ombre, stylish shape. The device is handmade and consist of brass, this robust material will make the lifespan of the appliance longer. The dark bronze finish of the luminaire exudes craftmanship and it creates an unique atmosphere in the house.

SPECIFICATIONS

PRODUCT CODE	LENGTH	WIDTH	HEIGHT	WEIGHT	MATERIAL	FINISH
BOX-SUR-P-25030-GRIP-X4-DB	250mm	250mm	52mm	0,950 kg	Brass	Dark bronze

INSIDE THE BOX: WHAT'S INCLUDED

5x

4x

4x

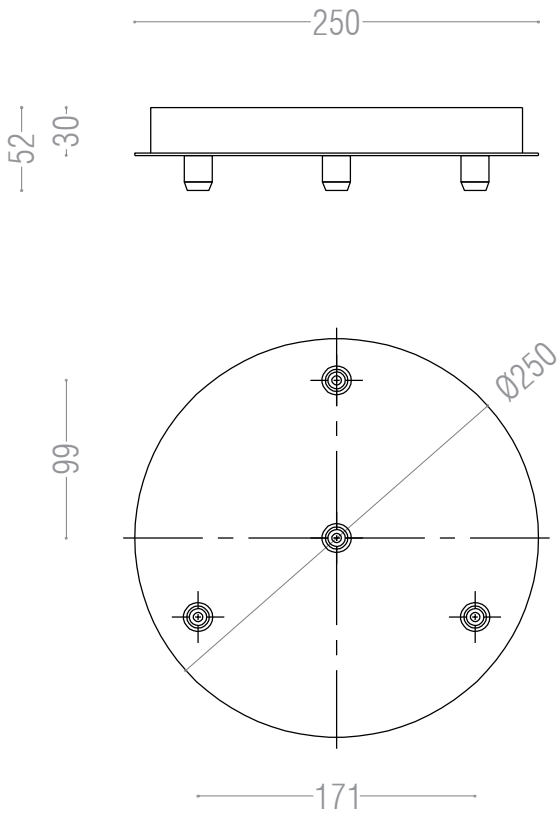

INSTALLATION GUIDE

These instruction are made for your safety. Please read them entirely before starting with the installation of the appliance.

This product may only be installed by an authorised electrical installer.

Make sure there are no other cables close by the place of the power cables.

Ensure to switch OFF the fuse before the installation

1

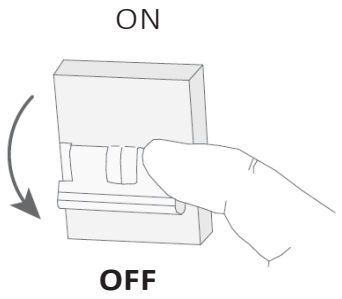

2

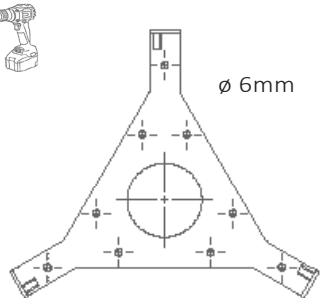

Measure the distance of the holes on the mounting plate and drill the holes in the ceiling.

3

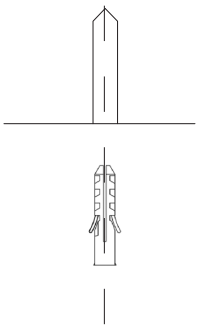

Use a hammer to install the screw plug in the drilled holes.

4

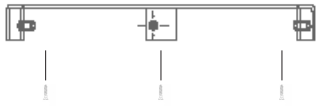

Screw the mountingplate with the supplied screws to the ceiling.

5

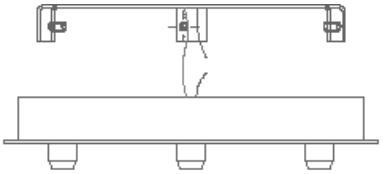

Use the wire connector to attach first the earth conductor and then the other cables. (Use the instruction file of Wago 221-413)

6

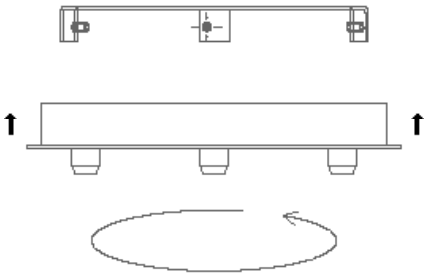

Secure the unit to the mounting plate by turning the plate in locked position.

7

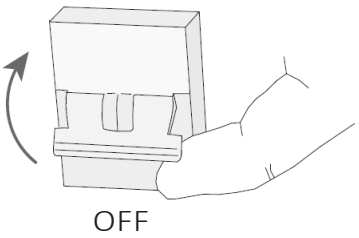

Be sure the installation is done right before switching ON the fuse.

The appliance is ready for use, enjoy the light.

OTHER IMPORTANT INFORMATION

The warranty is invalidated when the device is opened. The lamp in the appliance must only be changed by the manufacturer. Children should be discouraged from playing with the lights. Mount the appliance on dry surfaces, otherwise it may cause discolouration of the finish. Metal finishes should only be cleaned with a soft, dry cloth. Do not use polishes or abrasives. Keep this installation sheet for future uses.

Moortelmeers 3 B-8740 Pittem - T0032 51 69 83 62 - info@lombre.be - www.lombre.be

Data sheet | Item number: 221-413

COMPACT Splicing Connector; for all conductor types; max. 4 mm²; 3-conductor; with levers; transparent housing; Surrounding air temperature: max 85°C (T85); 4,00 mm²; transparent

www.wago.com/221-413

Item description

Your Benefits:

- Ease of use – pull the lever up, insert a conductor and push the lever back down
- Available as 2-, 3- and 5-wire connectors
- Easily terminate conductors from 0.14 to 4 mm²
- Connect solid, stranded and fine-stranded conductors
- Time savings for installers and device manufacturers
- Quickly install devices with higher levels of power consumption
- Safely install long cable runs with larger conductor cross sections
- Mounting carrier for installation conforms to standards
- Custom carriers are possible

Safety information 1:
In grounded power lines

Data

Electrical data

Ratings per IEC/EN 60664-1

Ratings per	EN 60664
Nominal voltage (II/2)	450V
Rated surge voltage (II/2)	4 kV
Rated current	32A
Legend (ratings)	(II / 2) = Overvoltage category II / Pollution degree 2

Ratings per UL 1059

Approvals per	UL 486C
Rated voltage UL (Use Group C)	600V
Rated current UL (Use Group C)	20A

Subject to changes. Please also observe the further product documentation!

WAGO Kontakttechnik GmbH & Co. KG
Hansastr. 27
32423 Minden
Phone: +49571 887-0 | Fax: +49571 887-169
Email: info.de@wago.com | Web: www.wago.com

Do you have any questions about our products?
We are always happy to take your call at +32 (0) 2 7179090.

Connection data

Connection technology	CAGE CLAMP®
Actuation type	Lever
Connectable conductor materials	Copper
Nominal cross-section	4 mm²
Solid conductor	0.2 … 4 mm² / 24 … 12 AWG
Stranded conductor	0.2 … 4 mm² / 24 … 12 AWG
Fine-stranded conductor	0.14 … 4 mm² / 24 … 12 AWG
Strip length	11 mm / 0.43 inch
Total number of connection points	3
Total number of potentials	1
Wiring type	Side-entry wiring

Installation Notes

Conductor termination

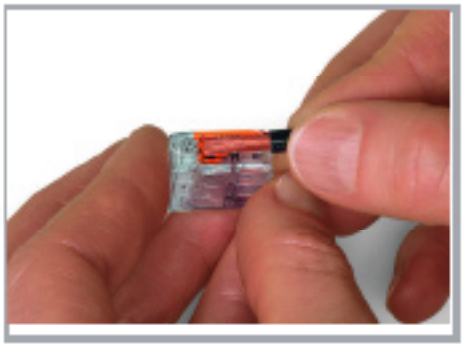

Strip conductor to 11 mm (0.43 inch).

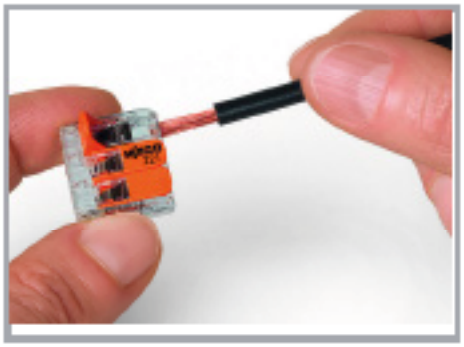

Termination: Lift the lever to open the clamping unit and insert a stripped conductor.

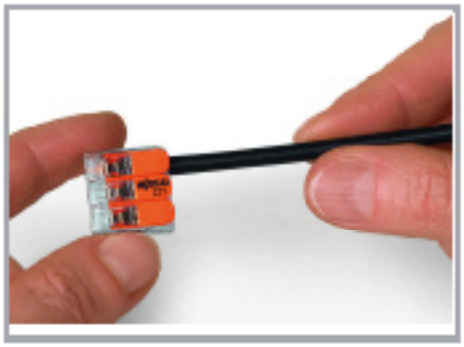

Then, lower the lever to close the clamp.

Application

WAGO Kontakttechnik GmbH & Co. KG
Hansastr. 27
32423 Minden
Phone: +49571 887-0 | Fax: +49571 887-169
Email: info.de@wago.com | Web: www.wago.com

Do you have any questions about our products?
We are always happy to take your call at +32 (0) 2 717 90290.

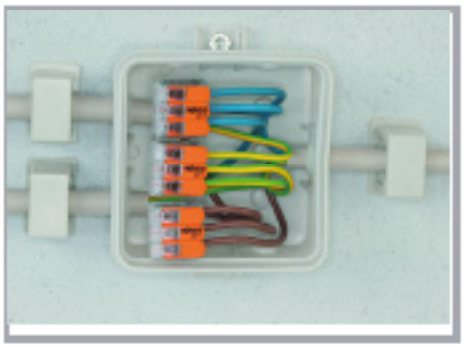

Wiring fine-stranded conductors in a junction box.

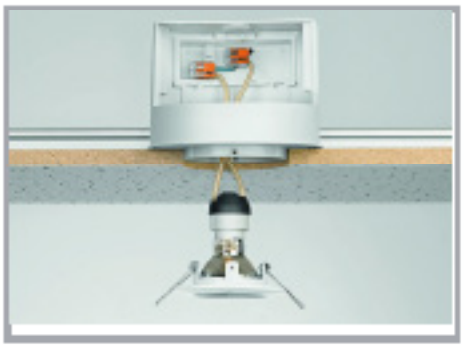

Custom low-voltage lighting system

Lighting distribution in ceiling canopy

Pendant light connection in suspended ceilings

COMPACT Splicing Connectors for All Conductor Types, 4 mm² (12 AWG), 221 Series

Subject to changes. Please also observe the further product documentation!

WAGO Kontakttechnik GmbH & Co. KG
Hansastr. 27
32423 Minden
Phone: +49571 887-0 | Fax: +49571 887-169
Email: info.de@wago.com | Web: www.wago.com

Do you have any questions about our products?
We are always happy to take your call at +32 (0) 2 71 79090.

Compact, lever-operated splicing connectors:

Tool-free connection of up to five stripped, fine-stranded conductors from 0.14 ... 4 mm², as well as solid or stranded conductors from 0.2 ... 4 mm² (24 ... 12 AWG).

How these work:

Pull up one of the orange operating levers to open the clamping unit. Then insert the conductor and push the lever back down, flush with the connector housing.

Safety:

The specially designed rest position of the lever reliably prevents accidental unclamping of a connected conductor.

Application safety, for any type of conductor (solid, stranded, fine-stranded), is confirmed by approvals like ENEC or UL.

Subject to changes. Please also observe the further product documentation!

WAGO Kontakttechnik GmbH & Co. KG
Hansastr. 27
32423 Minden
Phone: +49571 887-0 | Fax: +49571 887-169
Email: info.de@wago.com | Web: www.wago.com

Do you have any questions about our products?
We are always happy to take your call at +32 (0) 2 71 79090.