l'ombre®
EXCLUSIEVE VERLICHTING

# BOX-SUR-P-25030-GRIP-X3-DB

JUNCTION BOXES

## PRODUCT DETAILS

The junction boxes, designed by l'ombre, stylish shape. The device is handmade and consist of brass or iron: brass for the authentic dark bronze finish and iron when choosing one of our structured lacquers., this robust material will make the lifespan of the appliance longer.

## SPECIFICATIONS

| PRODUCT CODE | LENGTH | WIDTH | HEIGHT | WEIGHT | MATERIAL | FINISH |
|---|---|---|---|---|---|---|
| BOX-SUR-P-25030-GRIP-X3-DB | 250mm | 250mm | 52mm | 0,935 kg | Brass | Dark bronze |

## INSIDE THE BOX: WHAT'S INCLUDED

5x

4x

4x

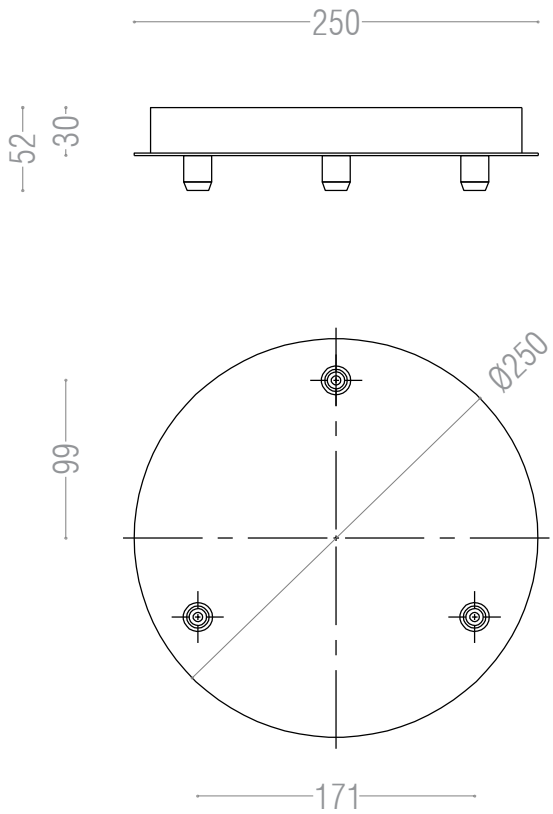

# INSTALLATION GUIDE

These instruction are made for your safety. Please read them entirely before starting with the installation of the appliance.

This product may only be installed by an authorised electrical installer.

Make sure there are no other cables close by the place of the power cables.

Ensure to switch OFF the fuse before the installation

1

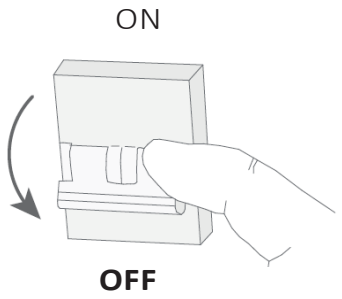


2

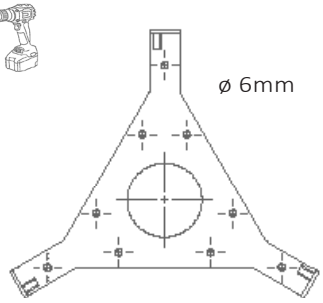


Measure the distance of the holes on the mounting plate and drill the holes in the ceiling.

3

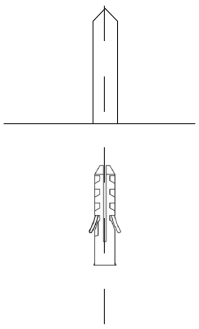

Use a hammer to install the screw plug in the drilled holes.

4

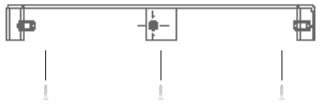

Screw the mountingplate with the supplied screws to the ceiling.

5

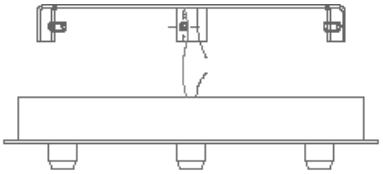

Use the wire connector to attach first the earth conductor and then the other cables. (Use the instruction file of Wago 221-413)

6

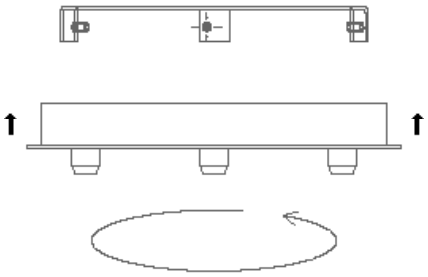

Secure the unit to the mounting plate by turning the plate in locked position.

7

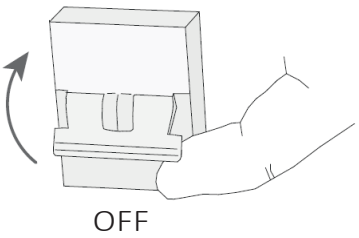


Be sure the installation is done right before switching ON the fuse.

The appliance is ready for use, enjoy the light.

# OTHER IMPORTANT INFORMATION

The warranty is invalidated when the device is opened. The lamp in the appliance must only be changed by the manufacturer. Children should be discouraged from playing with the lights. Mount the appliance on dry surfaces, otherwise it may cause discolouration of the finish. Metal finishes should only be cleaned with a soft, dry cloth. Do not use polishes or abrasives. Keep this installation sheet for future uses.

Moortelmeers 3 B-8740 Pittem - T0032 51 69 83 62 - info@lombre.be - www.lombre.be

# Data sheet | Item number: 221-413

COMPACT Splicing Connector; for all conductor types; max. 4 mm²; 3-conductor; with levers; transparent housing; Surrounding air temperature: max 85°C (T85); 4,00 mm²; transparent

www.wago.com/221-413

## Item description

Your Benefits:

- Ease of use – pull the lever up, insert a conductor and push the lever back down
- Available as 2-, 3- and 5-wire connectors
- Easily terminate conductors from 0.14 to 4 mm²
- Connect solid, stranded and fine-stranded conductors
- Time savings for installers and device manufacturers
- Quickly install devices with higher levels of power consumption
- Safely install long cable runs with larger conductor cross sections
- Mounting carrier for installation conforms to standards
- Custom carriers are possible

Safety information 1:
In grounded power lines

## Data

### Electrical data

#### Ratings per IEC/EN 60664-1

| | |
|---|---|
| Ratings per | EN 60664 |
| Nominal voltage (II/2) | 450V |
| Rated surge voltage (II/2) | 4 kV |
| Rated current | 32A |
| Legend (ratings) | (II / 2) = Overvoltage category II / Pollution degree 2 |

#### Ratings per UL 1059

| | |
|---|---|
| Approvals per | UL 486C |
| Rated voltage UL (Use Group C) | 600V |
| Rated current UL (Use Group C) | 20A |

Subject to changes. Please also observe the further product documentation!

WAGO Kontakttechnik GmbH & Co. KG
Hansastr. 27
32423 Minden
Phone: +49571 887-0 | Fax: +49571 887-169
Email: info.de@wago.com | Web: www.wago.com

Do you have any questions about our products?
We are always happy to take your call at +32 (0) 2 7179090.

## Connection data

| | |
|---|---|
| Connection technology | CAGE CLAMP® |
| Actuation type | Lever |
| Connectable conductor materials | Copper |
| Nominal cross-section | 4 mm² |
| Solid conductor | 0.2 … 4 mm² / 24 … 12 AWG |
| Stranded conductor | 0.2 … 4 mm² / 24 … 12 AWG |
| Fine-stranded conductor | 0.14 … 4 mm² / 24 … 12 AWG |
| Strip length | 11 mm / 0.43 inch |
| Total number of connection points | 3 |
| Total number of potentials | 1 |
| Wiring type | Side-entry wiring |

## Installation Notes

### Conductor termination

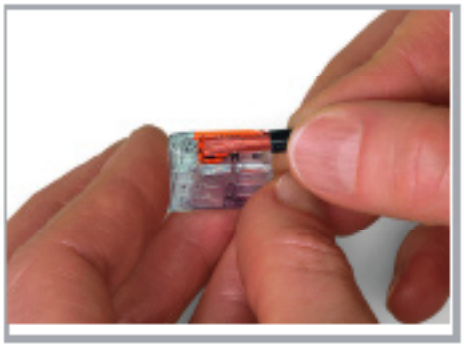

Strip conductor to 11 mm (0.43 inch).

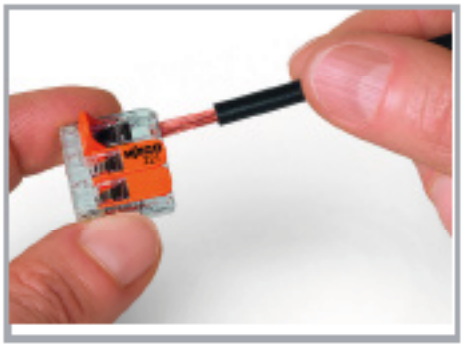

Termination: Lift the lever to open the clamping unit and insert a stripped conductor.

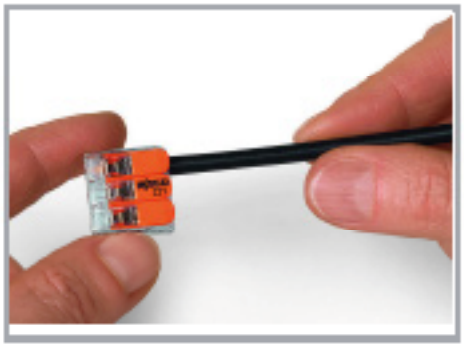

Then, lower the lever to close the clamp.

## Application



WAGO Kontakttechnik GmbH & Co. KG
Hansastr. 27
32423 Minden
Phone: +49571 887-0 | Fax: +49571 887-169
Email: info.de@wago.com | Web: www.wago.com

Do you have any questions about our products?
We are always happy to take your call at +32 (0) 2 717 90290.

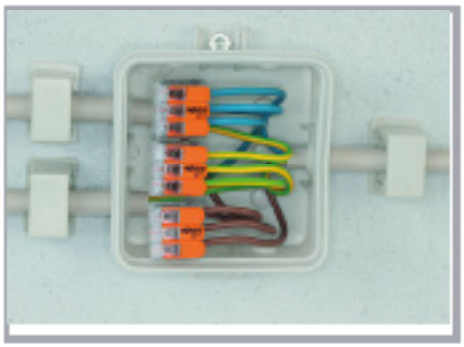

Wiring fine-stranded conductors in a junction box.

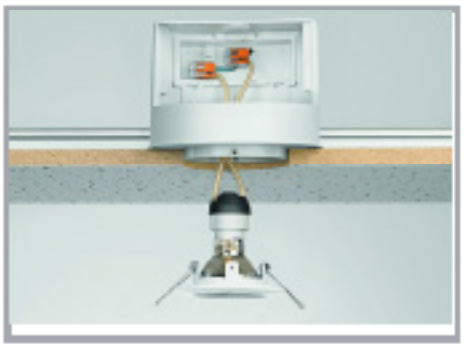

Custom low-voltage lighting system

Lighting distribution in ceiling canopy

Pendant light connection in suspended ceilings

COMPACT Splicing Connectors for All Conductor Types, 4 mm² (12 AWG), 221 Series

Subject to changes. Please also observe the further product documentation!

WAGO Kontakttechnik GmbH & Co. KG
Hansastr. 27
32423 Minden
Phone: +49571 887-0 | Fax: +49571 887-169
Email: info.de@wago.com | Web: www.wago.com

Do you have any questions about our products?
We are always happy to take your call at +32 (0) 2 71 79090.

Compact, lever-operated splicing connectors:

Tool-free connection of up to five stripped, fine-stranded conductors from 0.14 ... 4 mm², as well as solid or stranded conductors from 0.2 ... 4 mm² (24 ... 12 AWG).

How these work:

Pull up one of the orange operating levers to open the clamping unit. Then insert the conductor and push the lever back down, flush with the connector housing.

Safety:

The specially designed rest position of the lever reliably prevents accidental unclamping of a connected conductor.

Application safety, for any type of conductor (solid, stranded, fine-stranded), is confirmed by approvals like ENEC or UL.

Subject to changes. Please also observe the further product documentation!

WAGO Kontakttechnik GmbH & Co. KG
Hansastr. 27
32423 Minden
Phone: +49571 887-0 | Fax: +49571 887-169
Email: info.de@wago.com | Web: www.wago.com

Do you have any questions about our products?
We are always happy to take your call at +32 (0) 2 71 79090.