l'ombre®
EXCLUSIEVE VERLICHTING

NOCTILUCIA-S-SHELL-L-B-N-PEN-00-DB

NOCTILUCIA SERIE

PRODUCT DETAILS

Noctilucia, designed by l'ombre exclusive lighting is characterised by its sophisticated and ingenious design. Noctilucia's base is finished in dark bronze. The mouth-blown glass is available in different colours and creates a unique experience in a wide variety of applications.

Equipped with the latest LED technology, Noctilucia is perfectly compatible with contemporary residential automation. Noctilucia fits perfectly with all the other fixtures of the l'ombre family.

SPECIFICATIONS

MAX 5.6W | 500 MA | BUILT IN LED | IP20

PRODUCT CODE	LENGTH	WIDTH	HEIGHT	WEIGHT	MATERIAL	COLOUR
NOCTILUCIA-S-SHELL-L-B-N-PEN-00-DB	210mm	210mm	116mm	1,250 kg	Glass / Ceramic	Blue / Natural

INSIDE THE BOX: WHAT'S INCLUDED

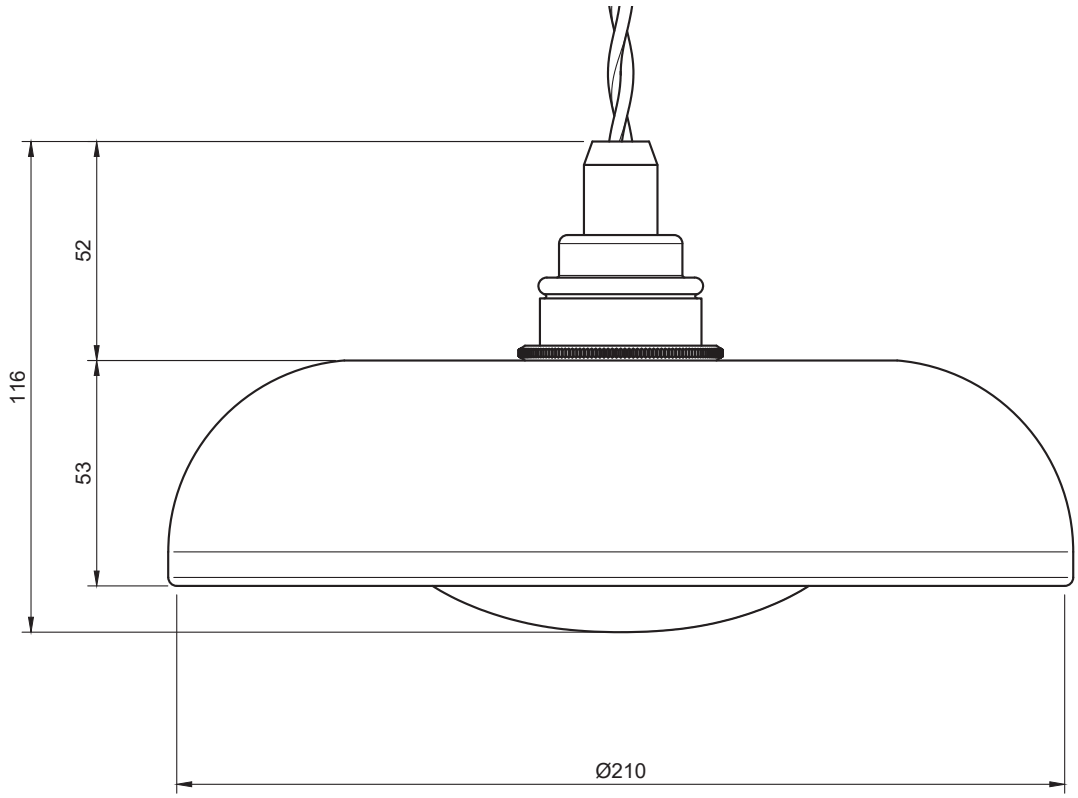

INSTALLATION GUIDE

The installation of the product depends on the used canopy, please check out the installation sheets of your canopy.

This product may only be installed by an authorised electrical installer.

Make sure there are no other cables close by the place of the power cables.

Ensure to switch OFF the fuse before the installation

1

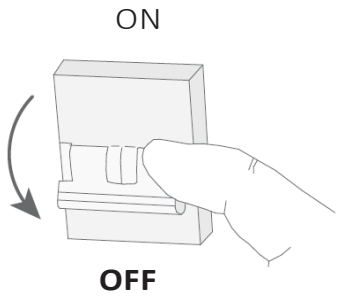

2

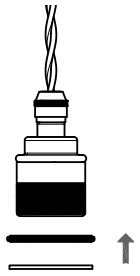

First, mount a bronze ring and a rubber ring.

3

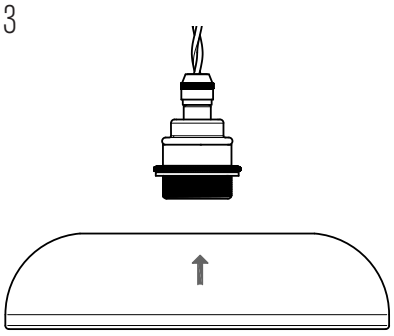

Turn the ceramic part on the fixture.

4

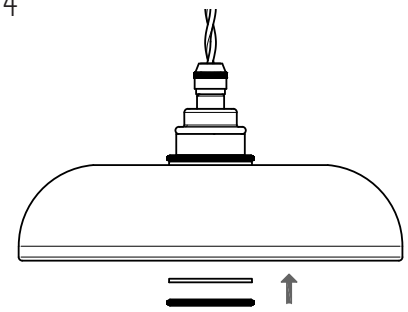

Lock the ceramic part in place with a rubber ring and a bronze ring.

5

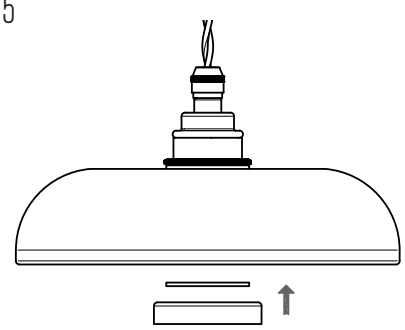

Mount the 3rd rubber ring and the bronze glasring on the fixture.

6

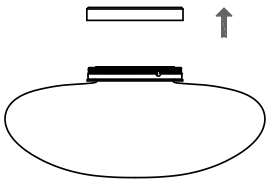

Before mounting the glass, first remove the protection cover.

7

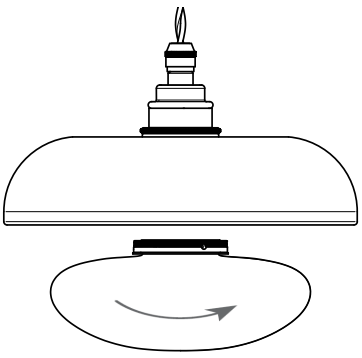

Turn the glass part on the fixture.

8

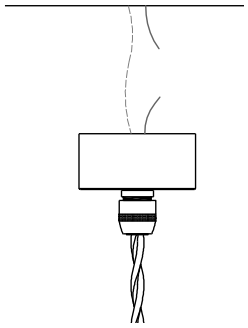

Connect the power cable to your chosen connection box

9

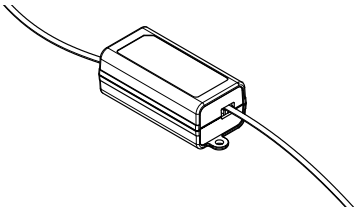

Select and connect your driver (set the driver, 500MA max.). Multiple devices in one circuit must be connected serial.

10

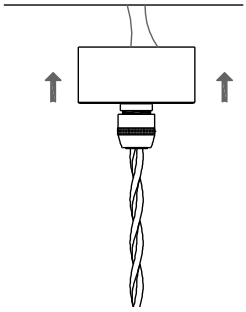

Mount the connectionbox to the surface.

11

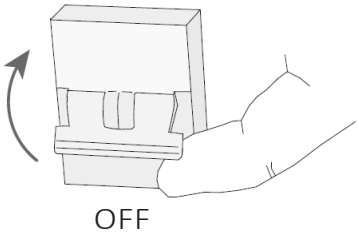

Be sure the installation is done right before switching ON the fuse.

The appliance is ready for use, enjoy the light.

OTHER IMPORTANT INFORMATION

The warranty is invalidated when the device is opened. The lamp in the appliance must only be changed by the manufacturer. Children should be discouraged from playing with the lights. Mount the appliance on dry surfaces, otherwise it may cause discolouration of the finish. Metal finishes should only be cleaned with a soft, dry cloth. Do not use polishes or abrasives. Keep this installation sheet for future uses.