l'ombre®
EXCLUSIEVE VERLICHTING

LOU-ARM-BES-DB
LOUIS COLLECTION

PRODUCT DETAILS

The Louis collection is designed by l'ombre exclusive lighting. The lighting fixture has a frame in dark bronzed brass and is available in two different types of glass. Brass ensures the high durability of the unique lighting fixture. The handmade Louis is finished with our highest quality standards. The elegant finish not only exudes craftmanship but also creates a unique atmoshphere around the home. The different models in our collection complement each other nicely, as well as the other collections we carry.

SPECIFICATIONS

MAX 8W | 230 Vac | IP44 | E27

PRODUCT CODE	LENGTH	WIDTH	HEIGHT	WEIGHT	MATERIAL	FINISH
LOU-ARM-BES-DB	54 cm	30 cm	67 cm	16 kg	Brass	Dark bronze

ACCESSOIRES INSIDE THE BOX: WHAT'S INCLUDED

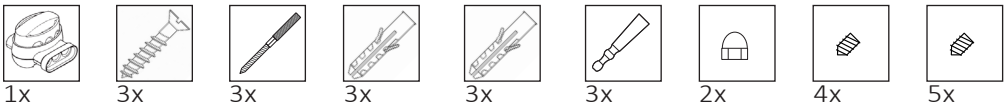

1x | 3x | 3x | 3x 8mm | 3x 14mm | 3x | 2x | 4x inox | 5x black

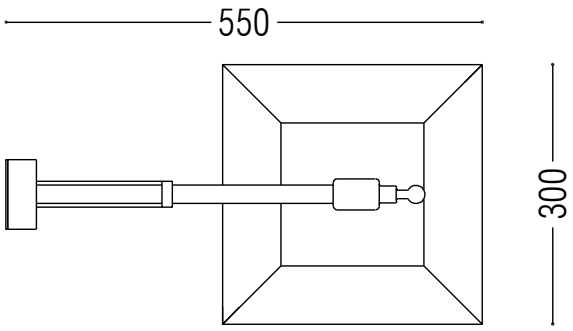

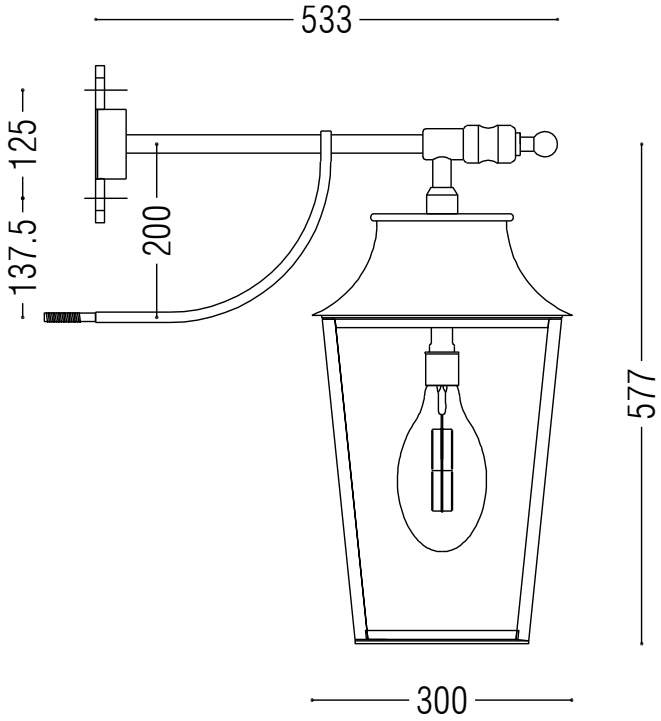

INSTALLATION GUIDE FOR ARM

These instruction are made for your safety. Please read them entirely before starting with the installation of the appliance.

This product may only be installed by an authorised electrical installer.

Make sure there are no other cables close by the place of the power cables.

Ensure to switch OFF the fuse before the installation

1

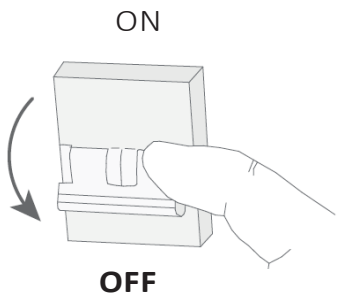

2

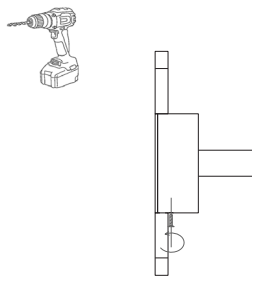

Detach the base off the light fixture by unscrewing the bottom pin.

3

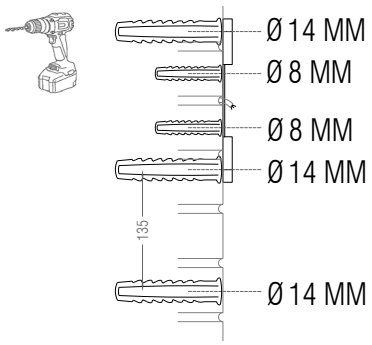

Place the base of the fixture on the wall to mark the drill points. Drill the holes in the right diameter.

4

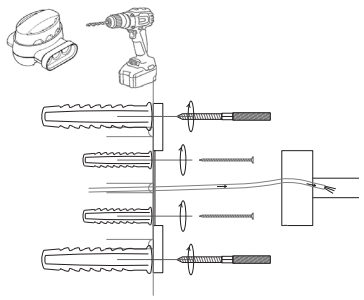

Screw the base to the wall. Use a scotchlok to connect the earth conductor (see below). Insert the other cables in the fixture arm.

5

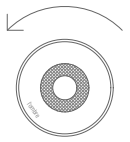

Attach the light fixture to the base by turning it a quarter turn counter clockwise.

6

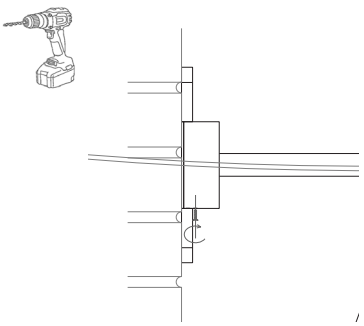

Secure the light fixture with the supplied pin.

7

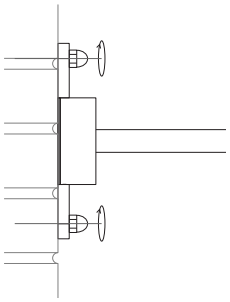

Screw the bolts on the screws.

8

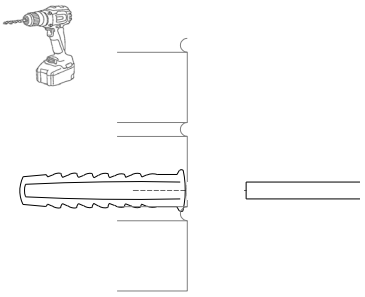

Place the support of the fixture on the wall to mark the drill points. Drill the hole in diameter 14mm.

9

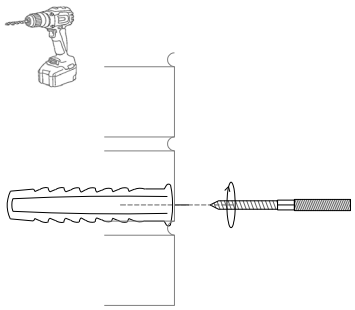

Screw the hanger screw in the hole.

10

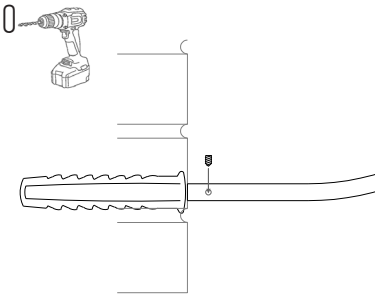

Place the support of the fixture on the hanger screw and secure it with two set screws.

11

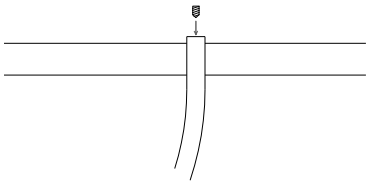

Use a set screw to fix the support to the fixture.

Moortelmeers 3 B-8740 Pittem - T0032 51 69 83 62 - info@lombre.be - www.lombre.be

INSTALLATION GUIDE FOR LOUIS

These instruction are made for your safety. Please read them entirely before starting with the installation of the appliance.

This product may only be installed by an authorised electrical installer.

Make sure there are no other cables close by the place of the power cables.

Ensure to switch OFF the fuse before the installation

1

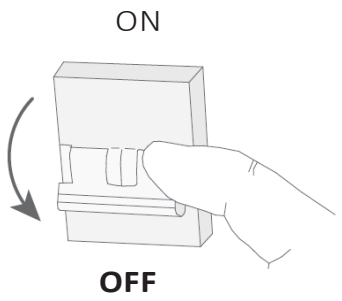

2

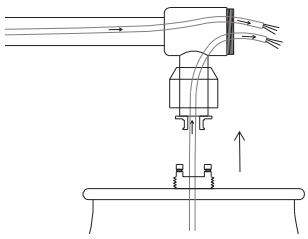

Pass the electric wire of the lantern through the arm.

3

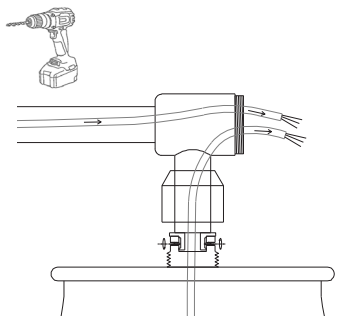

Attach the lantern to the arm.

4

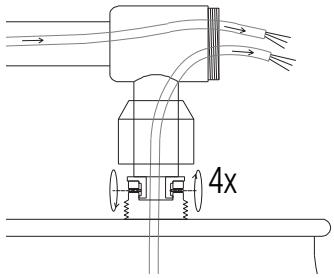

Rotate the component and attach it to the lantern.

5

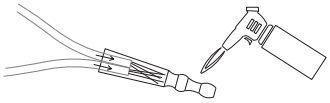

Use the easysolder to connect the earth conductor

6

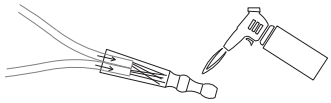

Use the other easysolder to connect the other cables..

7

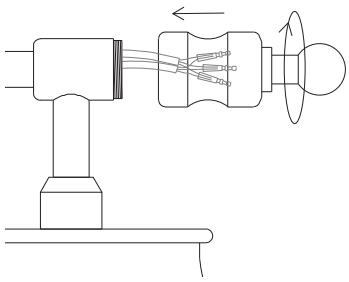

Place the connectors in the top component and screw it on the arm.

8

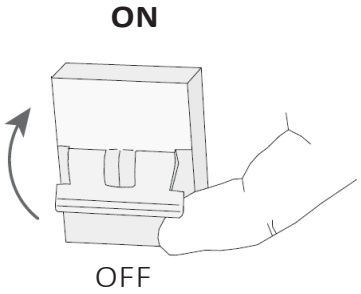

Be sure the installation is done right before switching ON the fuse.

The appliance is ready for use, enjoy the light.

OTHER IMPORTANT INFORMATION

The warranty is invalidated when the device is opened. The lamp in the appliance must only be changed by the manufacturer. Children should be discouraged from playing with the lights. Mount the appliance on dry surfaces, otherwise it may cause discolouration of the finish. Metal finishes should only be cleaned with a soft, dry cloth. Do not use polishes or abrasives. Keep this installation sheet for future uses.

Moortelmeers 3 B-8740 Pittem - T0032 51 69 83 62 - info@lombre.be - www.lombre.be

Scotchlok™ 314

Self-Stripping Moisture Resistant, Electrical Pigtail Connectors

Data Sheet

Application

Use Part No. 314 to electrically connect two or three wire ends, insulate the connection, and provide a moisture resistant seal.

Wire Range

22-14 AWG Solid or stranded, tinned or untinned (0,5-1.5 mm²) copper conductors. For use with common thermoplastic insulated wires: T, TF, TFF, TFN, TFFN, AWM, TEW, SAE-GPT with a maximum insulation diameter of .150 inches (3,8 mm). Maximum recommended current for general purpose applications: 22 AWG - 3 AMPS, 20 AWG - 5 AMPS, 18 AWG - 7 AMPS, 16 AWG - 10 AMPS, 14 AWG - 15 AMPS.

Construction

U-contact - Tin plated brass, .02 in. (0,5 mm) thick

Insulator - Flame retardant nylon,
Color - cap/dk. blue, body/white

Sealant - Mineral Oil Base EG-3 Grease

Weight

.0077 lb. (3,49 gm)

Recommended Installation Tools

3M™ Crimping Tool No. E-9BM
Mechanics (slip joint) Pliers

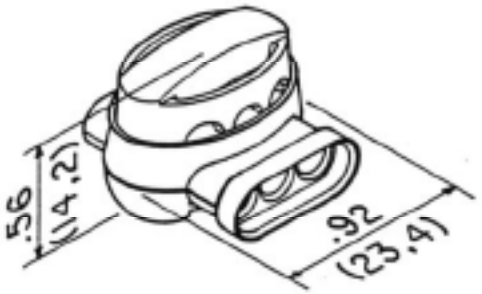

Installation Instructions

⚠ WARNING

Turn power off before installing or removing terminal. All electrical work should be done according to appropriate electrical codes.

1. Insert 2 or 3 unstripped wires completely into connector and check their position by looking through the translucent connector body.
2. Hold tool perpendicular to the wires and make the connection by driving the cap down flush with the top edge of the connector body.

Regulatory Agencies

UL Listed - Tested per UL Standard 486C

UL file No. E23438

CSA certified - CSA Std. C22.2 No. 0. 188-M1983

CSA File No. LR15503
(Voltage rated at 600 volts maximum, building wire: 1000 volts maximum, signs, fixtures and luminaires. Operating Temperature: 105°C.)

Note: UL Listed and CSA Certified for AWG only. Connector is not recommended for direct underground burial or other submerged applications.

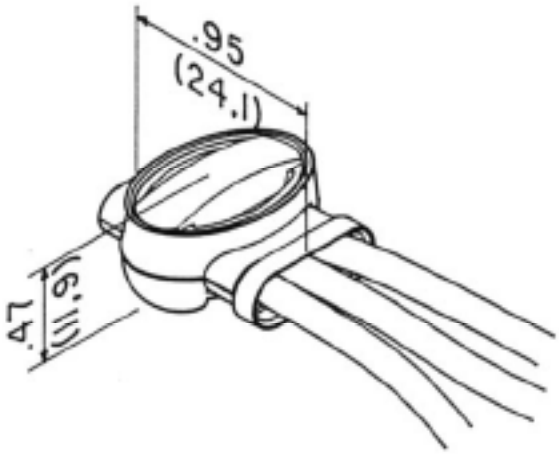

Engineering Specification

Self-Stripping Electrical Connector (as manufactured by 3M, part No. 314) capable of connecting 2 or 3 wires in the range of No. 22 thru No. 14 AWG solid or stranded copper wire in a pigtail application while insulating the connection and providing a moisture resistant seal. Connector shall be UL Listed and CSA Certified for 600 volts maximum, building wire: 1000 volts maximum, signs, fixtures and luminaires, and temperature rated 105°C maximum.

3M and Scotchlok are trademarks of 3M Company.

UL is a trademark of Underwriters Laboratories.

CSA is a trademark of Canadian Standards Association.

IMPORTANT NOTICE

Before using this product, you must evaluate it and determine if it is suitable for your intended application. You assume all risks and liability associated with such use.

Warranty; Limited Remedy; Limited Liability. This product will be free from defects in material and manufacture as of the date of purchase. 3M MAKES NO OTHER WARRANTIES INCLUDING, BUT NOT LIMITED TO, ANY IMPLIED WARRANTY OF MERCHANTABILITY OR FITNESS FOR A PARTICULAR PURPOSE. If this product is defective within the warranty period stated above, your exclusive remedy shall be, at 3M's option, to replace or repair the 3M product or refund the purchase price of the 3M product. Except where prohibited by law, 3M will not be liable for any loss or damage arising from this 3M product, whether direct, indirect, special, incidental or consequential regardless of the legal theory asserted.

3M

Electrical Products Division

6801 River Place Blvd.
Austin, TX 78726-9000
www.3M.com/elpd

Litho in USA
©3M 2003 78-8126-6515-3-A