BOX-MDF-RECTANGULAR-150045-R225-UNPAINTED

JUNCTION BOXES

PRODUCT DETAILS

Flexible connection solution with our MDF connection box Do you only have a single power point, limiting your lighting options? Our MDF connection box provides the perfect solution. This discreet and stylish connection box allows you to connect multiple individual lighting elements while neatly concealing all wiring and drivers. This way, you maintain full flexibility in your lighting design without visible cables or technical limitations. The MDF connection box is easy to install and can be optionally equipped with subtle bronze strain reliefs, ensuring that your lighting setup is not only functional but also refined.

SPECIFICATIONS

PRODUCT CODE	LENGTH	WIDTH	HEIGHT	WEIGHT	MATERIAL	FINISH
BOX-MDF-RECATANGULAR-150045-R225-UNPAINTED	1500mm	450mm	46mm	12.13 kg	MDF	Unpainted

INSIDE THE BOX: WHAT'S INCLUDED

3x

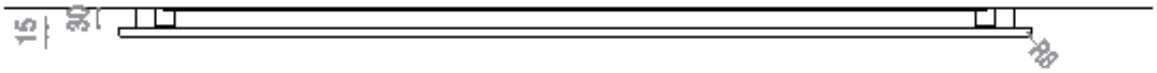

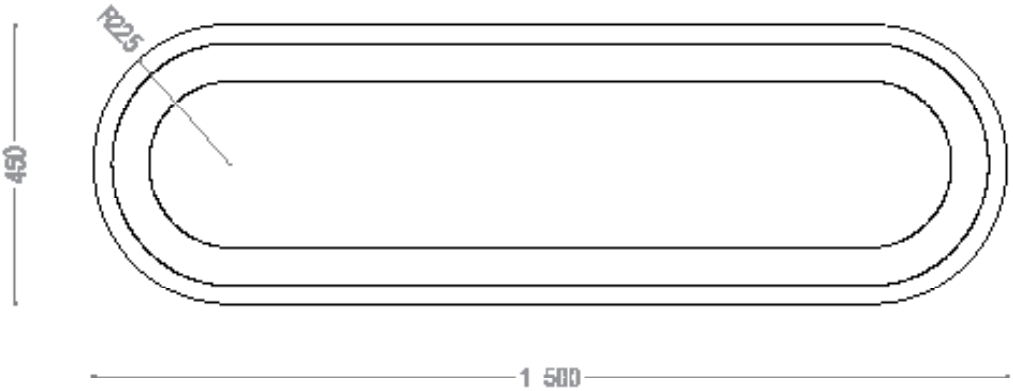

INSTALLATION GUIDE

These instructions are made for your safety. Please read them entirely before starting with the installation of the appliance.

This product may only be installed by an authorised electrical installer.

Make sure there are no other cables close by the place of the power cables.

Ensure to switch OFF the fuse before the installation

1

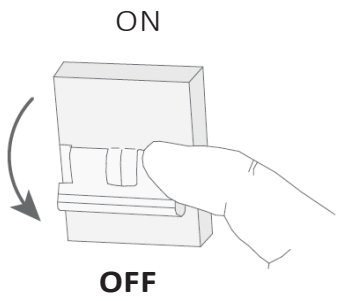

2

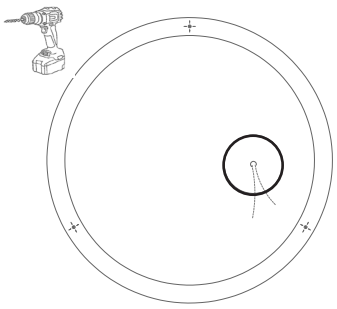

Drill a hole in the mounting plate at the location of the power supply.

3

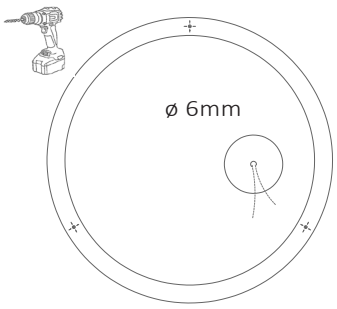

Mark the holes through the mounting plate and drill the holes in the ceiling.

4

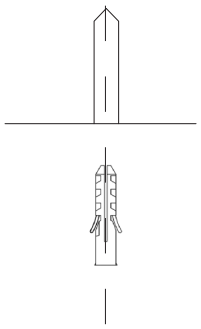

Use a hammer to install the screw plug in the drilled holes.

5

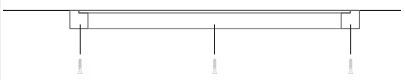

Screw the mountingplate with the supplied screws to the ceiling.

6

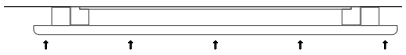

Move the cover over to the mounting plate.

7

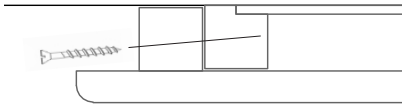

Secure the cover to the mounting plate with the supplied screws.

8

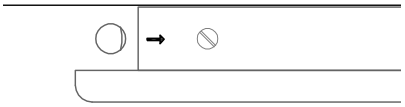

Cover the screws with the supplied stickers.

9

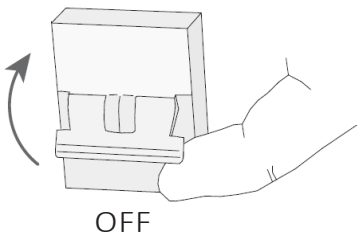

Be sure the installation is done right before switching ON the fuse.

The appliance is ready for use, enjoy the light.

OTHER IMPORTANT INFORMATION

The warranty is invalidated when the device is opened. The lamp in the appliance must only be changed by the manufacturer. Children should be discouraged from playing with the lights. Mount the appliance on dry surfaces, otherwise it may cause discolouration of the finish. Metal finishes should only be cleaned with a soft, dry cloth. Do not use polishes or abrasives. Keep this installation sheet for future uses.